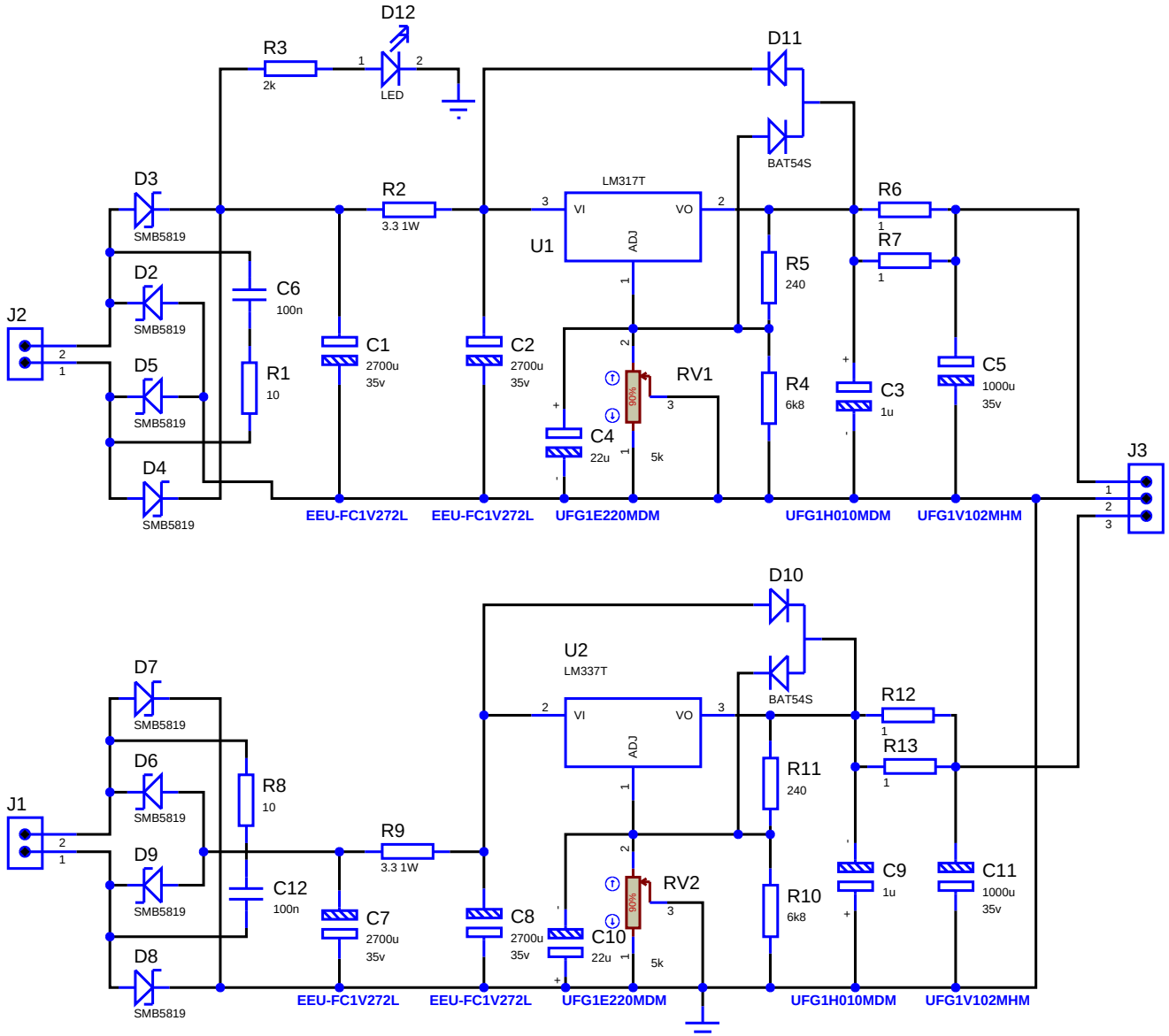

JLsounds	**Adjustable Dual PSU**
	Rev 1.0 **2015**